Scope Wonder

This is simply a great performing wall washer. With a 3" aperture sitting completely recessed, this fixture pushes the light all the way to the top of the wall. Providing a 2:1 vertical illumination ratio from top to bottom on a 10' wall, we challenge you to find anything better. The Scope W 3" wall wash is part of larger Scope Wonder downlight collection providing an incredibly wide selection of finishes, mounting options, sources and technology including the release of our INK tunable white source in 2 dynamic ranges.

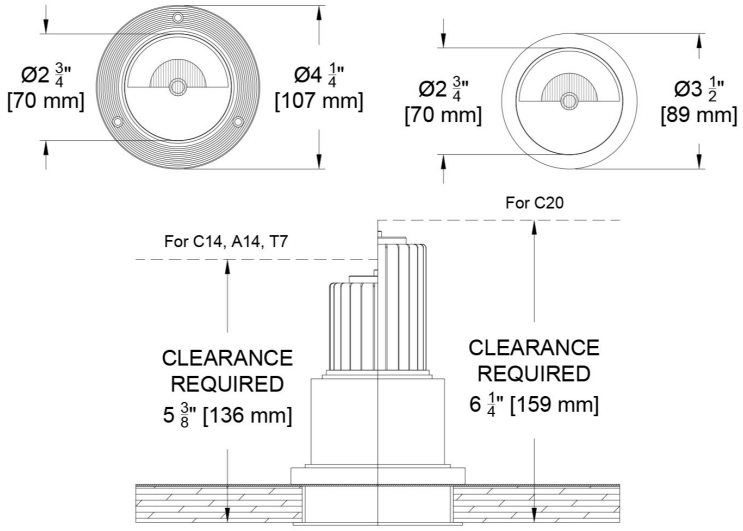

Round Standard Size (F)

(See page 4 for Details)

ROUND Wall Wash				
Source	System watts (W)	Delivered Lumens (lm)	Lumens/ Watt	Peak cd
Citizen C14	15	766	52	1178
Citizen C20	21	1072	52	1072
Ambient Dim A14	15	504	34	843
Tunable White 1840	10	339	36	530
Tunable White 2765	10	447	45	930
Flux and color data based on 3000 CCT Multipliers used for extrapulating lumen value for other CCT				

For additional information see Photometric table and notes on page 7

PROJECT: TYPE:

SPECIFIER: DATE:

Key Points (SCW3WW-R)

Trim

- Flange or flangeless
- 40 flange color options + custom RAL
- Machined aluminum Body in USA

Source / Optics

- LIfetime: L87B3>55,000 hours at 40ºC Ambient (for fixed white)
- Tunable White with 2 available ranges (1800 to 4000k and 2700 to 6500k)
- Achieves 2:1 vertical illumination ratio from top to bottom of wall with 2.5' setback and 2.5' on-center spacing
- Up to 1072 delivered lumens
- <2 MacAdams Ellipses (<2 SDCM)
- 90+ CRI, 60+ R9 Standard, 95+ CRI, 90+ R9 available with Ambient Dim option
- 2400K, 2700K, 3000K, 3500K, 4000K
  Ambient Dim, RGBW & Tunable White options
- TITLE 24 C14 and T7 2765 Sources meet California Title 24 Requirements to JA8

Housing

- Remodel or millwork option available
- TITLE 24 IC Rated / airtight housing approved for use in direct contact with insulation Chicago Plenum Available and meets CA Title 24
- 2 pan options IC rated for use in direct contact with insulation (not for spray foam)

Driver And Control

- Drivers are integral with fixtures unless noted as remote mount with * in ordering code options. "K can" type drivers do not fit through the 3" hole
- TruPhase™, 0-10, DALI-2, DMX, Ecosystem or Wireless Control
- Flicker free to IEEE 1789-2015 available with EldoLED and TruPhase™ selections
- Universal 120-277v

© 2026 Specialty Lighting Industries

Specialty Lighting Industries
1306 Doris Ave., Ocean, NJ 07712
Tel. 732.517.0800 | Fax 732.517.0971

specialty lighting industries

Ordering Codes

PROJECT:

SPECIFIER:

DATE:

TYPE:

QUANTITY:

Ordering Code Example: SCW3WW-R-F-BP-A14-AD-E2-A32

FIXTURE	TRIM	MOUNTING	LUMENS / WATTS	CCT	DRIVER / CONTROL	BEZEL FINISH	TRIM FINISH	ACCESSORIES
SCW3WW-R								
Scope Wonder 3" Wall Wash - Round	F Flanged Trim Z Flangeless Trim	NP New Pan (IC rated) for Mounting to bottom of studs^ BP Bracket Pan (IC Rated) for mounting with hanger bars to studs or T-bar^ AT ● ● Airtight Housing* PM Panel Mount§ RM Remodel mounts direct to ceiling - Wing Springs for flanged and drywall anchors for flangeless ● ● CA Title 24 Compliant * Chicago Plenum available with AT ^ Not Airtight, Not for use with spary foam § Must be used with flangeless trims.	**Citizen** C14 ● ● 15W 717Lm 90+CRI, 60+R9 C20 21W 925Lm 90+CRI, 60+R9 **Tunable** T7 ● ● 10W 90+CRI, 60+R9 *Tunable White* T20 ● ● 21W 90+CRI, 60+R9 *Tunable White* **Ambient Dim™** A14 15W 95+CRI, A20 ● ● 21W 95+CRI, ● ● CA Title 24 Compliant ^1840cct is not Title 24 compliant *based on 2765cct +LTT or EldoLED driver selection required and will be supplied with 2 channel version View Photometry	24 2400K 27 2700K 30 3000K 35 3500K 40 4000K **Tunable** TW1840 1800-4000K Tunable White *w/ E1, E2, E3, E4* TW2765 2700-6500K Tunable White *w/ E1, E2, E3, E4* **Ambient Dim™** 2722* 2700-2200K **A14 Only* 3019 3000-1900K 3022 * 3000-2200K **A14 Only* * Not compliant with California Title 24	C1 0-10 1.0%, UNV (120-277V) linear C2 ELV/Triac 1.0%, (120V) linear E1 0-10* 0.1%, UNV (120-277V) log E2 DALI-2* 0.1%, UNV (120-277V) log E3 0-10* 0.1%, UNV (120-277V) linear E4 ^ DMX 0.1%, UNV (120-277V) Universal DMX Driver/Controller *RGBW-DMX* *^ INCLUDES DMX/RDM COMPATIBLE DRIVER WITH BUILT-IN DECODER - CONTROLLER BY OTHERS* TR2 TruPhase™ 0.1%, (120-120V) log Up to 20W Forward and Reverse compatible Phase Dimming Static White & Ambient Dim only LD Digital Ecosystem* 1.0%, UNV (120-277V) ECO Hi-Lume SoftOn/Fade-to-Black LDE1 * Requires remote mounting	V01 Clear Metalize V02 Black Metalize V03 Champagne Metalize V04 Gold Metalize * See Finish Guide FINISH GUIDE LINK	W White Paint A01 Black Anodize A32 Clear Aluminum Anodize AXX Specialty anodize color* A1-A36 PXX Specialty Paint Color* P01-P15 C Custom/RAL Color** K Blank for use with Flangeless or Panel Mount *See Finish Guide FINISH GUIDE LINK	CP Chicago Plenum EM Emergency Pack CA Casambi Wireless BLE to be paired with driver **Controls** LR Lutron Wireless RF PowPak ATH Lutron Athena Wireless Node *Must be used with E2 driver (DALI-2)*

© 2026 Specialty Lighting Industries

NOTE: Last Updated on Wed, Oct 21, 2026 4:38 PM.
These specifications are subject to change without notice.

Specialty Lighting Industries
1306 Doris Ave., Ocean, NJ 07712
Tel. 732.517.0800 | Fax 732.517.0971

Fixture Details

Threaded collar comes integral with Pan. Receiver with integral trim flange threads into collar. Body assembly attaches to receiver with J hooks

Round Construction

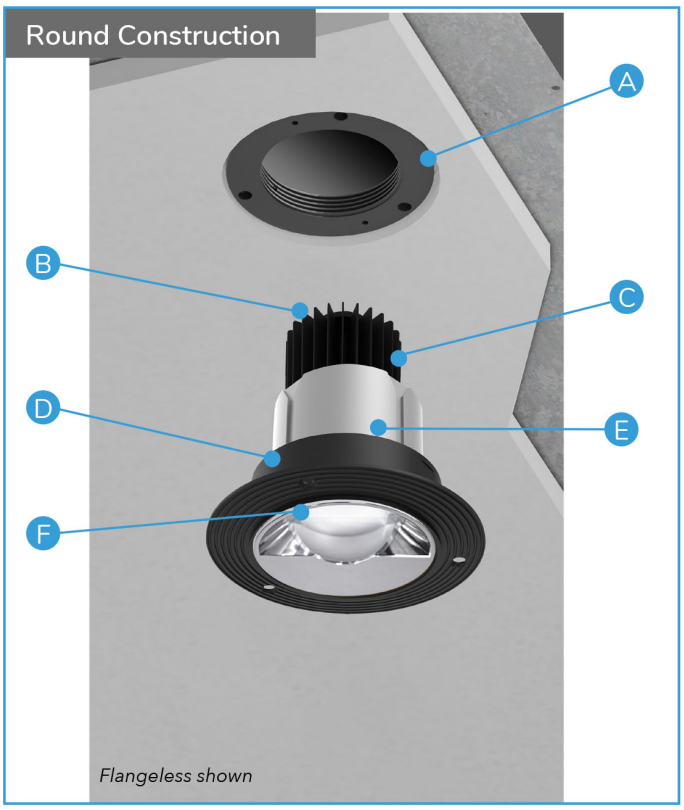

Flanged Trim Option

Clear Flange Trim (A32) (shown)

Flanged Finish Options

White P14	A01 Black Anodize	A32 Clear Anodize
Anodized AXX	Powder Coat PXX	Custom C

Standard Assembly Specs

- **A** Machined mounting collar integral with Pan or Housing to accommodate up to 1 1/4" ceiling thickness . Remodel versions uses Wing Springs (not shown)
- **B** 22AWG wire to Driver. Enclosed in flexible conduit connected to driver enclosure.
- **C** Thermal management system and body. High grade anodized aluminum, precision machined in the U.S.A.
- **D** Receiver – High Grade Aluminum precision machined in U.S.A. with integral flange
- **E** LED Assembly- Field serviceable as part of thermal management system **(not shown)**
- **F** Proprietary wall wash optic- Field changeable
- **G** Driver and enclosure – UL approved for IC
- **H** Finish trim flange for flanged option
- **I** Unique receiver for panel trim millwork wood ceiling

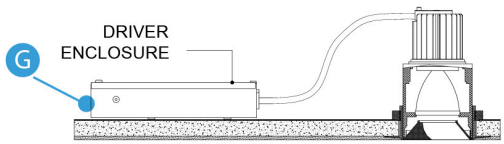

Panel Trim Option

Panel Trim Mounting bracket must be attached to ceiling panel prior to ceiling installation

© 2026 Specialty Lighting Industries

NOTE: Last Updated on Wed, Oct 21, 2026 4:38 PM.
These specifications are subject to change without notice.

Specialty Lighting Industries
1306 Doris Ave., Ocean, NJ 07712
Tel. 732.517.0800 | Fax 732.517.0971

Ceiling Cutouts and Dimensions

Round New or Bracket Pan — FlangelessTrim (Z)

(SCW3WW-R-Z-BP / NP-)

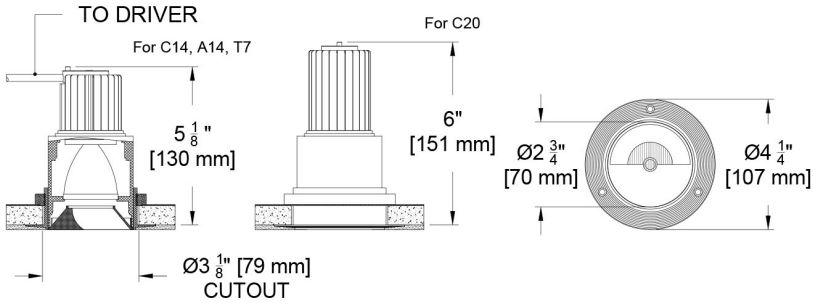

Round New or Bracket Pan — Flanged Trim (F)

(SCW3WW-R-F-BP / NP-)

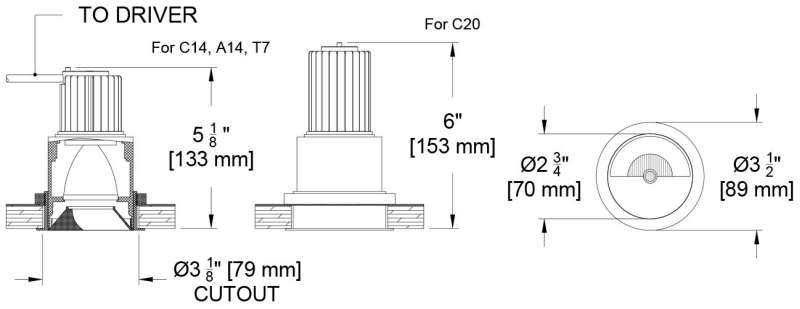

Round Panel Mount

(SCW3WW-R-F-PM-)

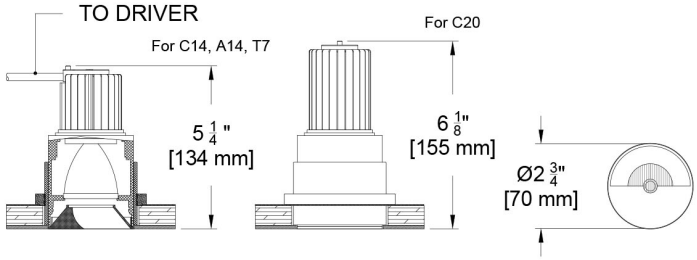

Panel Mount Detail (SCW3WW-R-Z-PM-)

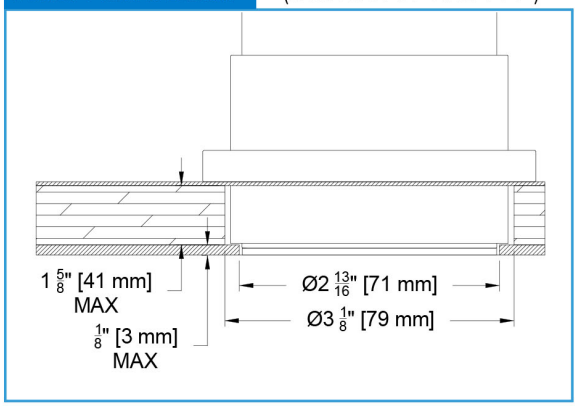

© 2026 Specialty Lighting Industries
NOTE: Last Updated on Wed, Oct 21, 2026 4:38 PM.
These specifications are subject to change without notice.
Specialty Lighting Industries
1306 Doris Ave., Ocean, NJ 07712
Tel. 732.517.0800 | Fax 732.517.0971

Ceiling Cutouts and Dimensions

Round Remodel — FlangelessTrim (Z)

(SCW3WW-R-Z-RM-)

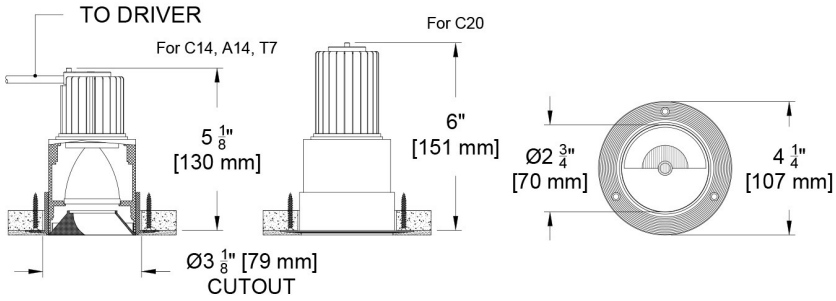

Driver Enclosure — for C1, C2, TR2

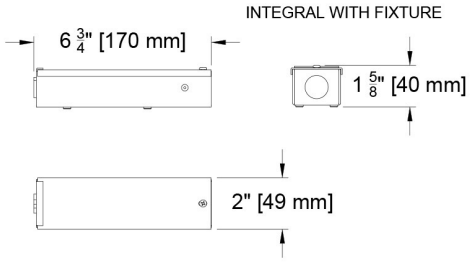

Driver Enclosure — for E1, E2, E3, E4, LD

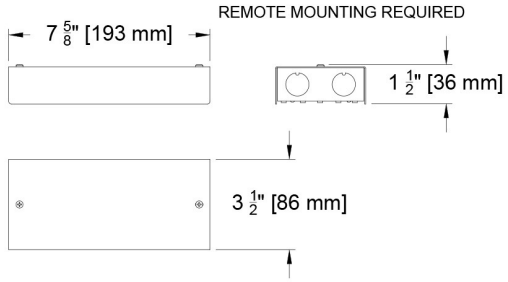

Round Remodel — Flanged Trim (F)

(SCW3WW-R-F-RM-)

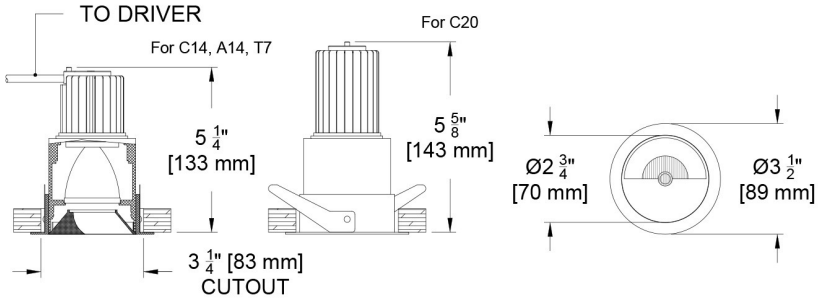

Round Airtight (AT)

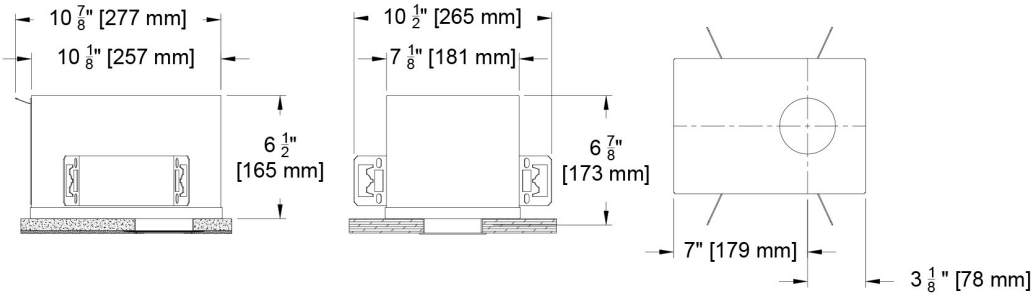

© 2026 Specialty Lighting Industries
NOTE: Last Updated on Wed, Oct 21, 2026 4:38 PM.
These specifications are subject to change without notice.
Specialty Lighting Industries
1306 Doris Ave., Ocean, NJ 07712
Tel. 732.517.0800 | Fax 732.517.0971

Mounting Options

New Pan (SCW3WW-R-_-NP)

For new construction and attachment to bottom of studs

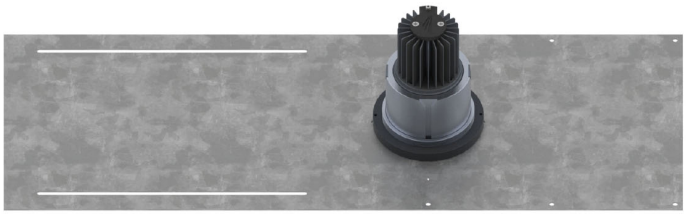

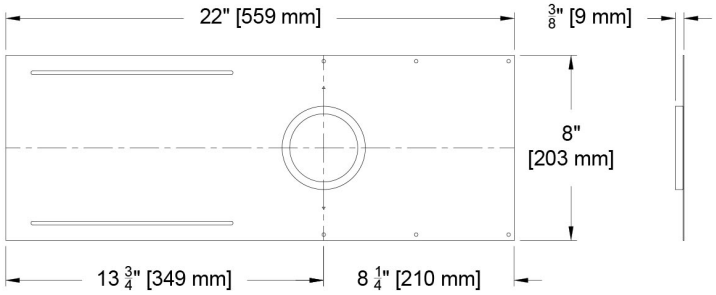

Bracket Pan (SCW3WW-R-X_-BP)

For new construction using hanger bars for attaching to studs or drop ceiling

Option 1- Attaching to Studs

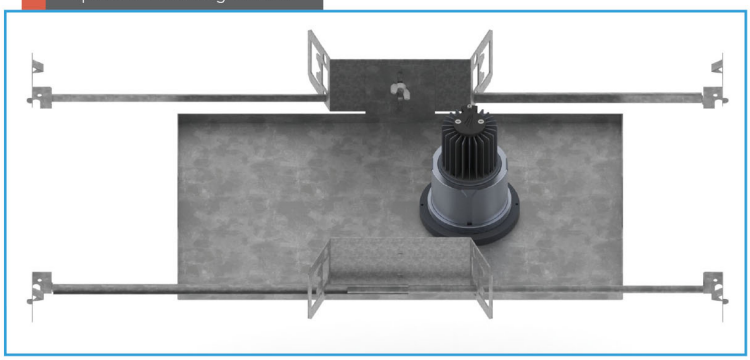

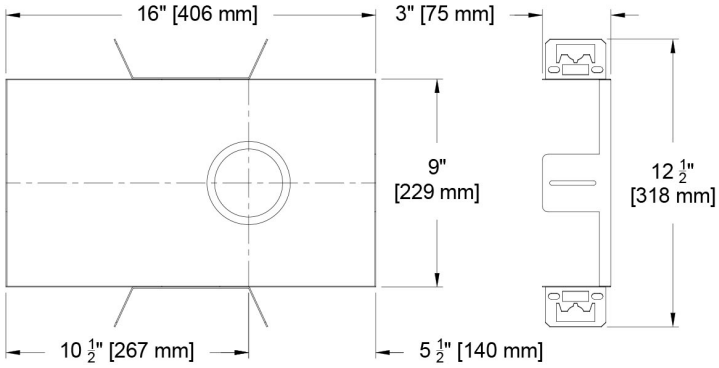

Option 2- Attaching to Drop Ceiling

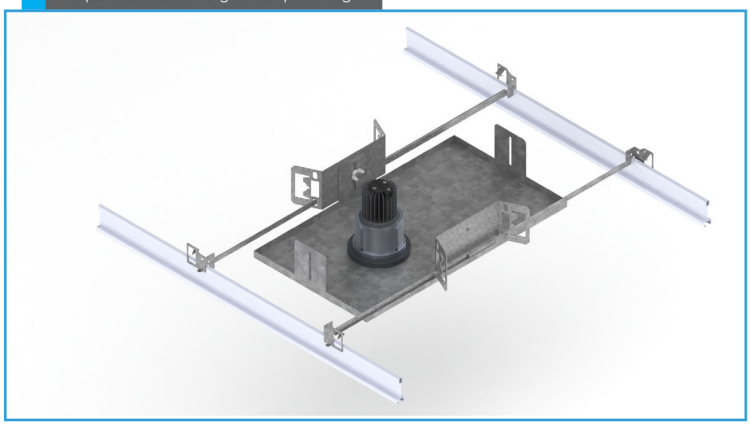

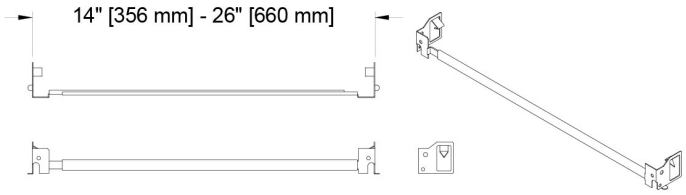

© 2026 Specialty Lighting Industries
NOTE: Last Updated on Wed, Oct 21, 2026 4:38 PM.
These specifications are subject to change without notice.
Specialty Lighting Industries
1306 Doris Ave., Ocean, NJ 07712
Tel. 732.517.0800 | Fax 732.517.0971

Photometric Table

All data below are delivered lumens based on goniometer measurements of production representative product. All lumen values can vary +/- 10% from LED manufacturer rated flux range.

ROUND Wall Wash				
Source	System watts (W)	Delivered Lumens (lm)	Lumens/ Watt	Peak CD
Citizen C14	15	766	52	1178
Citizen C20	21	1072	52	1072
Ambient Dim A14	15	504	34	843
Tunable White 1840	10	339	36	530
Tunable White 2765	10	447	45	930

CCT Multiplier	
CCT	Citizen
2700	0.95
3000	1.00
3500	1.02
4000	1.03

All Measurements 3000K unless otherwise noted below. Ambient dim measured at full output. Tunable White measurements a mid-point CCT of range (2700k for 1840 and 4500k for 2765). C20, A15 and T7-1840 does not meet CA Title 24 JA8 efficacy requirements.

Beam angle

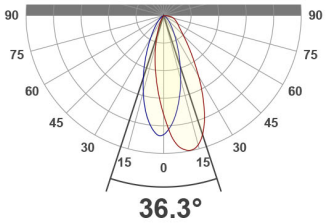

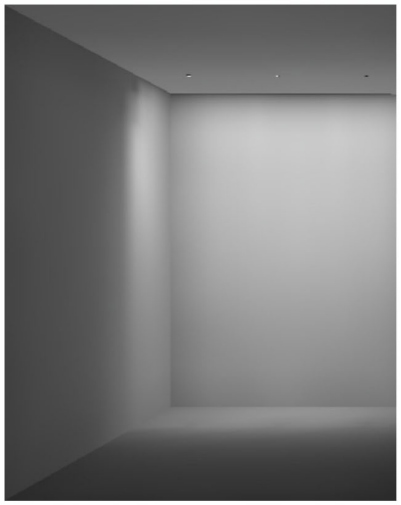

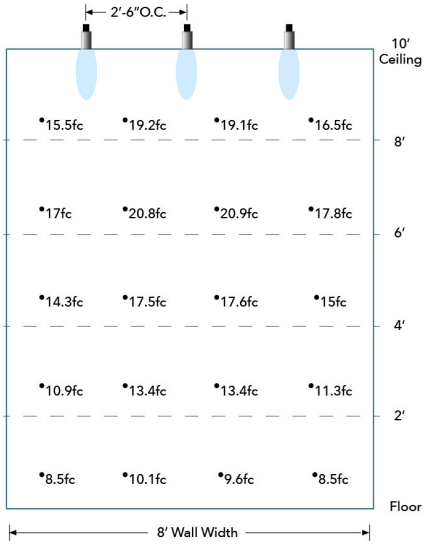

AGI Simulation of 3 Wall Wash fixtures in 8' square room at 10' ceiling height with 2.5' set back and (1:1) 2.5' on center spacing. 14W (717lm) fixture simulated

© 2026 Specialty Lighting Industries

Specialty Lighting Industries
1306 Doris Ave., Ocean, NJ 07712
Tel. 732.517.0800 | Fax 732.517.0971

Color Data

All data below are delivered lumens. Color and flux information based on goniometer measurements of production representative product. All values can vary +/- 10% from LED manufacturer rated data range as listed on their datasheet.

Citizen - C14 and C20

- <2 MacAdam Ellipse (<2 SDCM)
- 90+ CRI and RF
- 60+R9, Hue Bin 1

94 CRI | 70 R9 | 91 RF | 100 RG

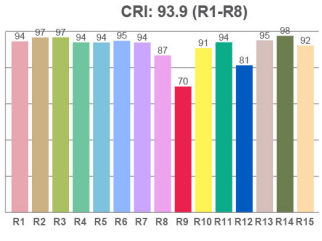

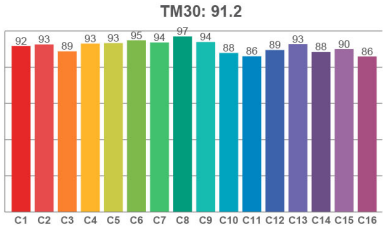

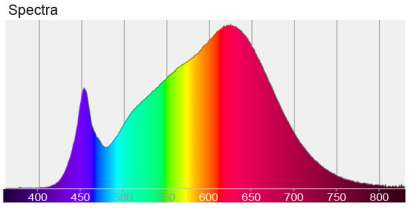

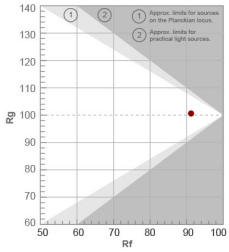

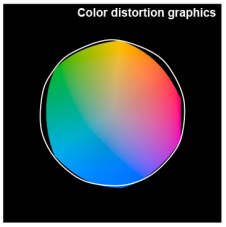

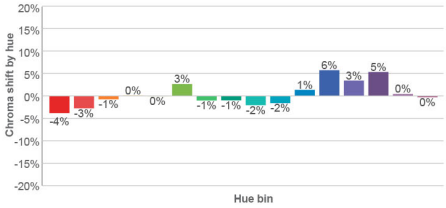

Ambient Dim - 3000k to 1900k

- <3 MacAdam Ellipse (<3 SDCM)
- 95+ CRI and RF
- 90+R9, Hue Bin 1
- Follows Black Body Locus through dimming range

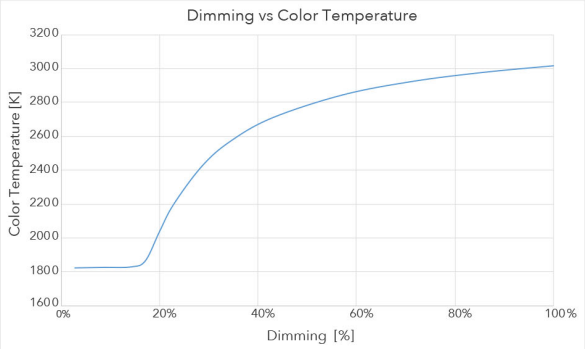

3000 CCT Full Output

97 CRI | 98 R9 | 95 RF | 104 RG

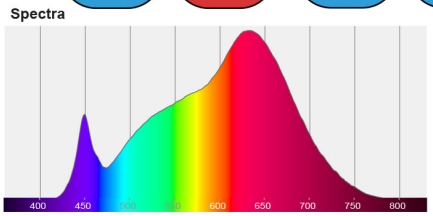

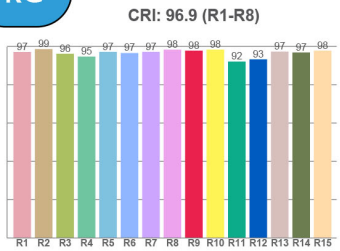

1850 CCT 5% Output

93 CRI | 72 R9 | 83 RF | 110 RG

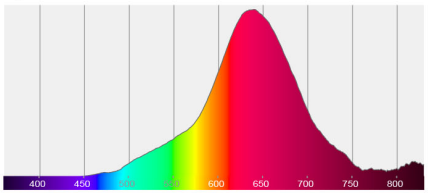

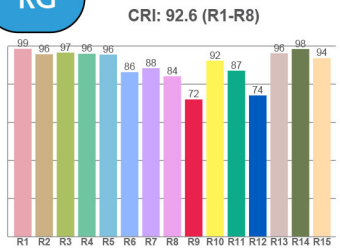

© 2026 Specialty Lighting Industries
NOTE: Last Updated on Wed, Oct 21, 2026 4:38 PM.
These specifications are subject to change without notice.
Specialty Lighting Industries
1306 Doris Ave., Ocean, NJ 07712
Tel. 732.517.0800 | Fax 732.517.0971

Tunable White 1800 to 4000k

- <3 MacAdam Ellipse (<3 SDCM)
- 94 CRI average across all CCTs
- 76 R9 average across all CCTs
- Available with wired or wireless control

INK	TUNABLE WHITE - 1800-4000K						
Color Temp	1800	2200	2500	2700	3000	3500	4000
System Watts	10	10	10	10	10	10	10
Delivered Lumens	262	299	323	339	372	394	394
Luminaire Efficiency	26	30	32	34	37	39	39

Flux and Color data based on Deep Regress 22° measurement at 2700k.
All other values are extroplated from actual and analytical tests

Spectral Power Distributions at all listed CCTs available upon request

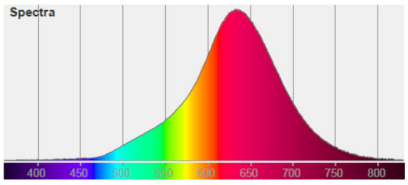

1800K

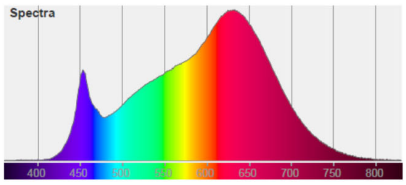

3000K

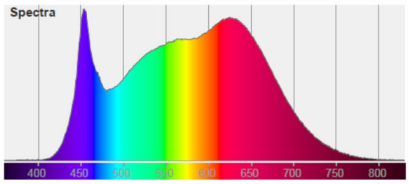

4000K

94 CRI | 76 R9 | 89 RF | 97 RG

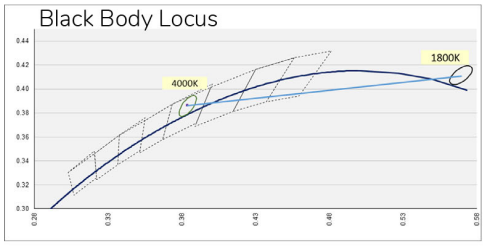

Tunable White 2700k to 6500k

- <3 MacAdam Ellipse (<3 SDCM)
- 94 CRI average across all CCTs
- 96 R9 average across all CCTs
- Available with wired or wireless control

INK	TUNABLE WHITE - 2700-6500K								
Color Temp	2700	3000	3500	4000	4500	5000	5500	6000	6500
System Watts	10	10	10	10	10	10	10	10	10
Delivered Lumens	420	433	447	448	447	446	446	444	450
Luminaire Efficiency	42	43	45	45	45	45	45	44	45

Flux and Color data based on Deep Regress 22° measurement at 4500k. All other values are extroplated from actual and analytical tests

Spectral Power Distributions at all listed CCTs available upon request

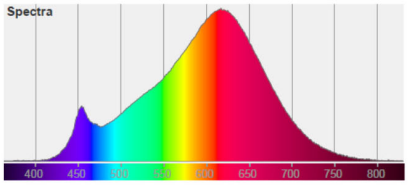

2700K

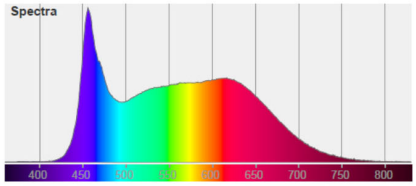

5000K

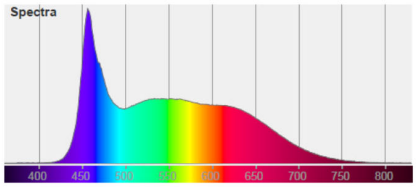

6500K

96 CRI | 96 R9 | 91 RF | 99 RG

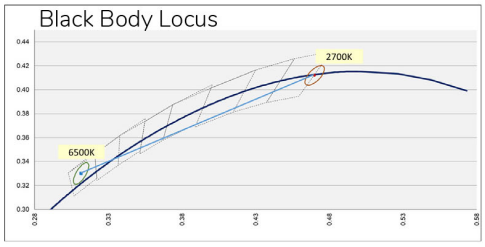

© 2026 Specialty Lighting Industries

NOTE: Last Updated on Wed, Oct 21, 2026 4:38 PM.
These specifications are subject to change without notice.

Specialty Lighting Industries
1306 Doris Ave., Ocean, NJ 07712
Tel. 732.517.0800 | Fax 732.517.0971